Altas for LCD Displays

Package Dimensions

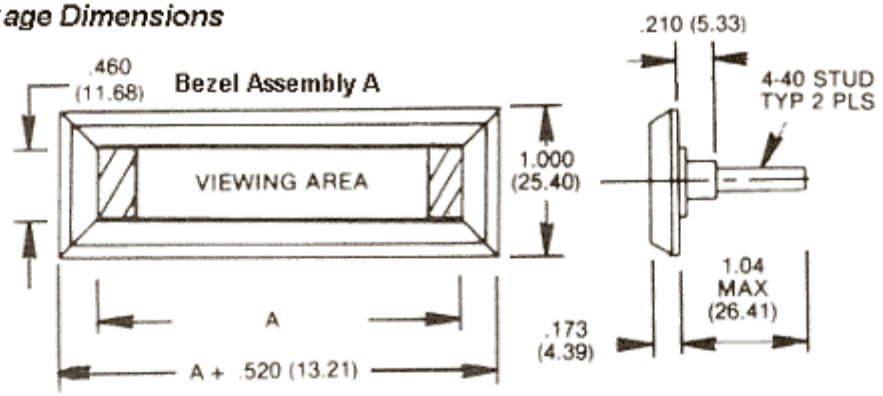

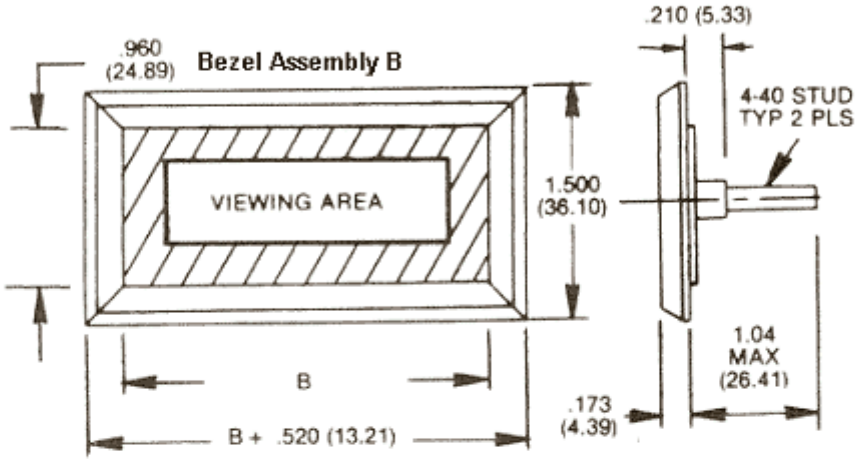

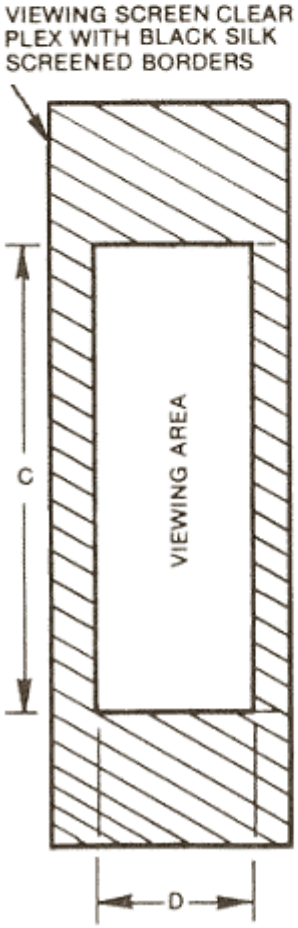

Dimension Table

PART NUMBER	BEZEL ASSEMBLY A	BEZEL ASSEMBLY B	VIEWING AREA C	VIEWING AREA D
DMH3540	2.180 (55.37)		1.630 (41.40)	.470 (11.94)
DMH3545	2.180 (55.37)		1.730 (43.94)	.470 (11.94)
DMH5050		2.180 (55.37)	1.700 (43.18)	.600 (15.24)
DMH5060		3.180 (80.77)	2.500 (63.50)	.600 (15.24)
DMH5080		4.180 (106.17)	3.500 (88.90)	.600 (15.24)
DMH7040		3.180 (80.77)	2.400 (60.96)	.900 (22.86)
DMH7050		3.680 (93.47)	2.820 (71.63)	.900 (22.86)
DMH7060		4.180 (106.17)	3.350 (85.09)	.900 (22.86)

All dimensions in inches and (millimeters).
Specifications subject to change without notice.

Mounting Systems

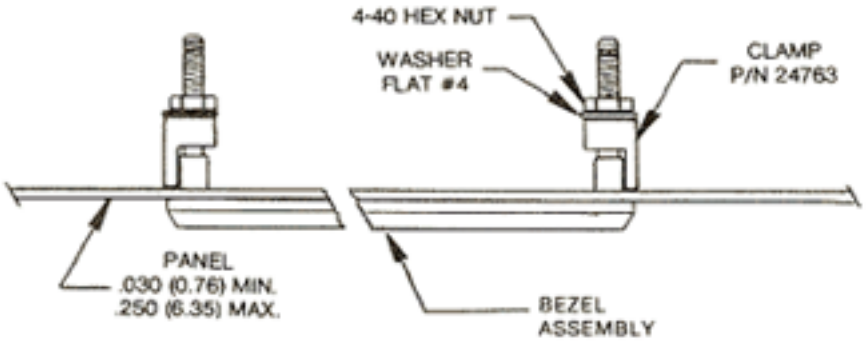

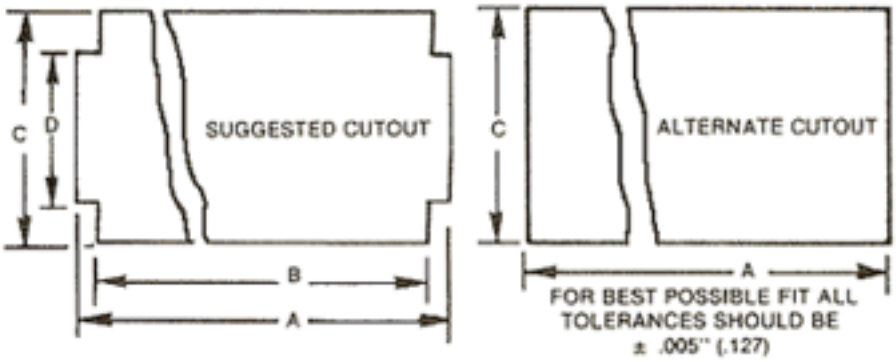

Panel Cutout Dimensions

PART NUMBER	SUGGESTED A	SUGGESTED B	SUGGESTED C	SUGGESTED D	ALTERNATE A	ALTERNATE C
DMH3540	2.580 (65.53)	2.300 (58.42)	.870 (22.10)	.500 (12.70)	2.580 (65.53)	.870 (22.10)
DMH3545	2.580 (65.53)	2.300 (58.42)	.870 (22.10)	.500 (12.70)	2.580 (65.53)	.870 (22.10)
DMH5050	2.580 (65.53)	2.300 (58.42)	1.350 (34.29)	.990 (25.15)	2.580 (65.53)	1.350 (34.29)
DMH5060	3.580 (90.93)	3.350 (85.09)	1.350 (34.29)	.990 (25.15)	3.580 (90.93)	1.350 (34.29)
DMH5080	4.600 (116.84)	4.370 (111.00)	1.350 (34.29)	.990 (25.15)	4.600 (116.84)	1.350 (34.29)
DMH7040	3.580 (90.93)	3.350 (85.09)	1.350 (34.29)	.990 (25.15)	3.580 (90.93)	1.350 (34.29)
DMH7050	4.100 (104.14)	3.870 (98.30)	1.350 (34.29)	.990 (25.15)	4.100 (104.14)	1.350 (34.29)
DMH7060	4.600 (116.84)	4.370 (111.00)	1.350 (34.29)	.990 (25.15)	4.600 (116.84)	1.350 (34.29)

All dimensions in inches and (millimeters).
Specifications subject to change without notice.

Ordering Information

I.E.E. ● ATLAS LCD MOUNTING HARDWARE	ACCOMMODATES I.E.E. ● POLARIS LCD MODELS	MOST LCD's WITH STANDARD GLASS SIZES (NOTE 1)
DMH3540	LCD5672 LCD5676	2.000" x 0.900" (50.80 x 22.86)
DMH3545	LCD5675	2.000" x 0.900" (50.80 x 22.86)
DMH5050	LCD5654 LCD5657 LCD5660 LCD5666 LCD5679	2.000" x 1.200" (50.80 x 30.48)
DMH5060	LCD5663	2.750" x 1.200" (69.85 x 30.48)
DMH5080	LCD5665	3.695" x 1.200" (93.85 x 30.48)
DMH7040	LCD5655 LCD5658	2.750" x 1.500" (69.85 x 30.10)
DMH7050	LCD5681	3.200" x 1.500" (81.28 x 38.10)
DMH7060	LCD5682	3.695" x 1.500" (93.85 x 38.10)

(NOTE 1)

LCD image areas may vary among manufacturers. Consult viewing screen opening dimensions shown under the package dimensions data on the front page for your particular LCD image area requirements before ordering.